REMOTE MOUNTED

powerite division of Kinetrol Ltd

ROSS a global family | pneumatrol

E45--C Series, 1/2”, 5/2 or 5/3 Function Solenoid Valve

DESCRIPTION

Pilot operated solenoid valve.

Hazardous area approved pilot operators (ExnA, Ex e mb, Exd and Exia) are available with various international approvals – ATEX, IECEx, FM, GOST CU TR (Russia) and NEPSI (China).

Body material available in
- Aluminium (standard)
- Stainless Steel
- Brass

Seal kit available – VSK501

FEATURES

- Internal or external pilot air connection
- Interchangeable CNOMO interface coils, including various hazardous area options
- Single coil spring return function or double coil stay put function
- Convenient fixing holes to enable bracket mounting
- Pilot exhaust dust caps fitted as standard
- SIL 2 Capable (Deenergise to trip @ HFT=0) SIL 3 Capable (Deenergise to trip @ HFT=1) (5/2 Solenoid/Spring Function Only)

PRODUCT CODE: E 4 5 [ ] [ ] C [ ] [ ] 0 [ ] [ ] [ ]

OPERATOR | COIL | OPTIONS 1 | VOLTAGE | DESIGNATOR | OPTIONS 2

SEE BELOW FOR PRODUCT CODE DETAILS

Any of the below options that are not required enter ‘0’ in relevant box.

Operator

1 8	Spring return, internal pilot air feed
8 0	Spring return, external pilot air connection
1 9	Double solenoid, internal pilot air feed
9 0	Double solenoid, external pilot air connection
1 4	5/3 All ports sealed mid position, internal pilot air feed
4 0	5/3 All ports sealed mid position, external pilot air connection
1 5	5/3 Inlet sealed open exhaust mid position, internal pilot air feed
5 0	5/3 Inlet sealed open exhaust mid position, external pilot air connection

Coil

A	Exia
B	Terminal Box
D	Exd
H	Plug & Socket Exia
K	MC30 Plug & Socket
L	MC30 Plug & Socket with LED
P	Plug & Socket
S	Exia Stainless Steel Housing
Y	ExnA Plug & Socket
4	Stainless Steel Housing
5	ExnA Stainless Steel Housing
8	Ex e mb Stainless Steel Housing

Options 1

C	Lever manual override
D	Push button manual override
S	Screw driver override
0	No option required

*** Not SIL approved with manual override options**

Standard Voltage

B	24v DC
H	24v DC Low Power (1)
R	24v AC (50/60 Hz)
T	110v AC (50/60 Hz)
N	220v AC (50/60 Hz)
U	240v AC (50/60 Hz)

*** A comprehensive range of nonstandard voltages available on request**

Designator

A	ATEX / IECEx (2)
B	ATEX / IECEx (10mA)
F	FM / CSA
G	ATEX Exd IIB
J	ATEX Ex e mb
R	GOST CU TR (3)
X	NEPSI (4)

Note:
(1) “H” option not available with Exia solenoids
(2) IECEx only available with Exia and Exd Solenoids
(3) GOST CU TR only available with Exd solenoids
(4) NEPSI only available with Exia and Exd solenoids

Options 2

B	Valve body brass
C	Valve body brass and NPT ports
D	Valve body brass, NPT ports and 1/2” NPT electrical connection
E	1/2” NPT electrical connection
L	Low temperature duty -40°C
M	NPT ports and 1/2” NPT electrical connection
N	NPT ports
P	Valve body stainless steel, NPT ports and 1/2” NPT electrical connection
R	Valve body stainless steel and NPT ports
S	Valve body stainless steel

*** A comprehensive range of nonstandard options available on request**

REMOTE MOUNTED

COIL ORIENTATION

The coil itself can be rotated in 90° steps by releasing the four securing screws. (FIG 1) When rotating the coil care should be taken to ensure the core assembly (core, spring, seal and washer) remains intact and aligned correctly. This is easily achieved by only lifting the coil the small amount required to clear the screws enabling the coil to be rotated.

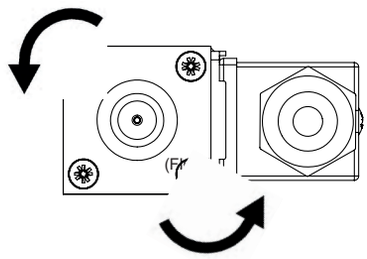

MATERIAL SPECIFICATIONS

	STANDARD
Body And End Caps	Black Anodised Aluminium (Dural)
Spool	Hard Anodised Aluminium PTFE Impregnated
Jet	Brass
Spacers	Glass Filled Acetal
Seals	Nitrile
Spring	Music Wire

VALVE SPECIFICATIONS

	STANDARD
Inlet Port Connection Size	1/2” BSP
Working Pressure Internal Pilot Version	3 to 10 bar
Working Pressure External Pilot Version	3 to 10 bar
Minimum External Pilot Pressure	3 bar
Cv Factor	3.5
Flow Rate (at 6 bar with 1 bar pressure drop)	3534 l/min
Maximum Ambient Temperature	+80 °C
Minimum Working Temperature	-20 °C

COIL DETAILS

Coil Type	Plug & Socket	Terminal Box	ExnA	Exd	Ex e mb	Exia
Area Class	Safe	Safe	Zone 2	Zones 1 & 2	Zones 1 & 2	Zone 0, 1 & 2
Area Category	N/A	N/A	ExN II T4-T6	Exd IIC T3-T6	Ex e mb IIC T4	Exia IIC T6
Ingress Protection	IP65	IP65	IP65	IP66	IP66	IP65
Cable Entry	PG.9	M20 x 1.5	M20 x 1.5 or PG.9	M20 x 1.5	M20 x 1.5	M20 x 1.5
Ambient Temperature	-20 to +80 °C	-20 to +80 °C	-20 to +60 °C	-20 to +80 °C	-20 to +65 °C	-20 to +65 °C
Magnetic Wire Class	H	H	H	H	H	H

*** FURTHER SOLENOID OPTIONS AVAILABLE ON REQUEST**

Specifications subject to change without prior notice.

DIMENSIONS (mm)

5/2 Position

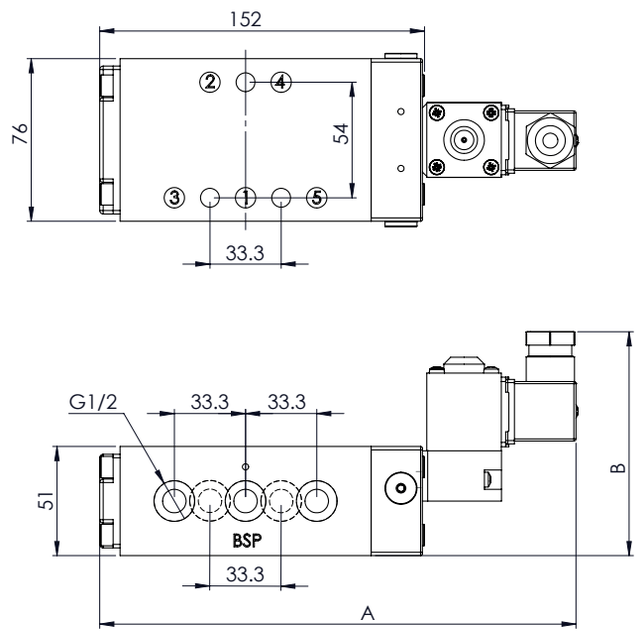

COIL TYPE	A	B
Plug & Socket	223	105
MC30 Coil	215	100
Terminal Box	220	114
ExnA SS Terminal Box	236	126
Exd	236	126
Exia	188	120
Ex e mb SS Terminal Box	236	126

5/3 Position

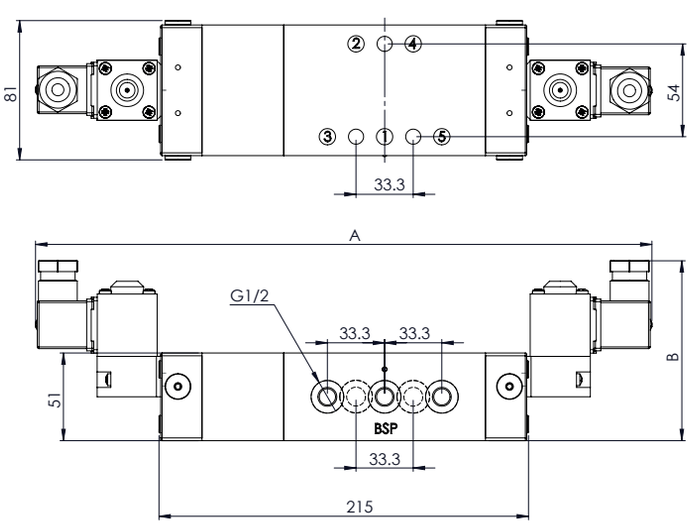

COIL TYPE	A	B
Plug & Socket	357	105
MC30 Coil	341	100
Terminal Box	351	114
ExnA SS Terminal Box	383	126
Exd	383	126
Exia	287	120
Ex e mb SS Terminal Box	383	126

Official Stockist:
Powerite - Division of Kinetrol Ltd, Steelpark Trading Estate, Steelpark Way, Wolverhampton, WV11 3BF
Tel: 01902 780700 Email: enquiries@powerite.co.uk www.powerite.co.uk